KEYENCE

RGB Digital Fiberoptic Sensors

CZ-V20 Series

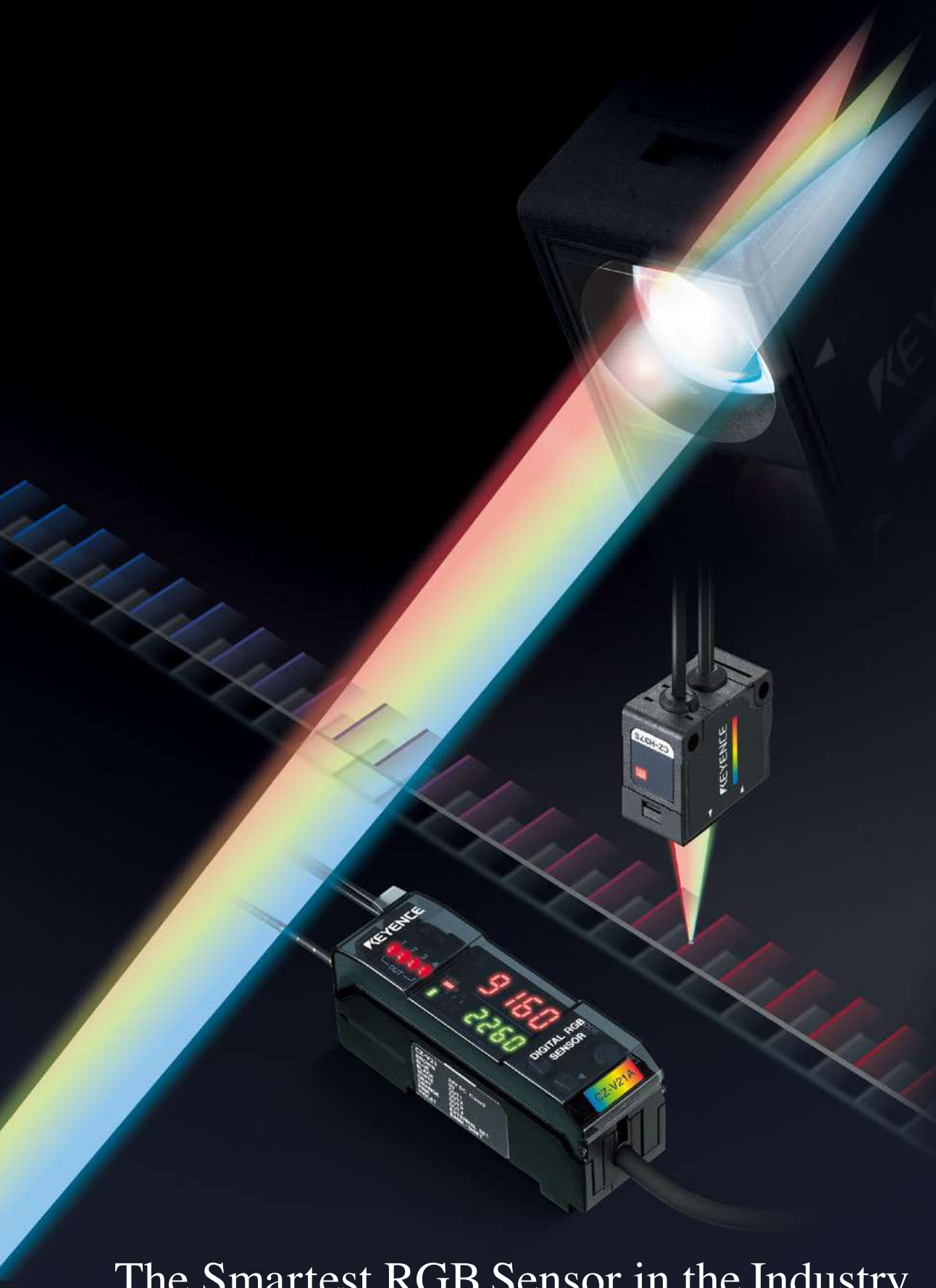

Luster-cancel,
small beam spot sensor head

CZ-H37S

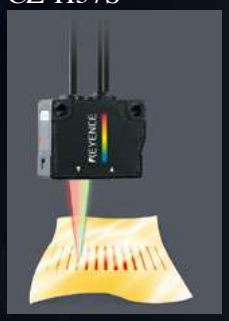

Adjustable spot,
color detection sensor head

CZ-H32

Luster-cancel,
color detection sensor head

CZ-H35S

Fluorescence
detection UV sensor head

CZ-H52

The Smartest RGB Sensor in the Industry

Two new sensor head models have been added to the product line

CE

The two new sensor heads will further

expand the range of applications for the SUPER RGB sensor.

Four types of sensor heads selectable according to target conditions and size.

The **luster-cancel type** cancels the influence of the luster of a target. The **adjustable spot type** allows adjustment of the beam spot size according to the target. The **fluorescence detection type** can detect fluorescent materials. These sensor heads offer highly stable detection while solving conventional problems.

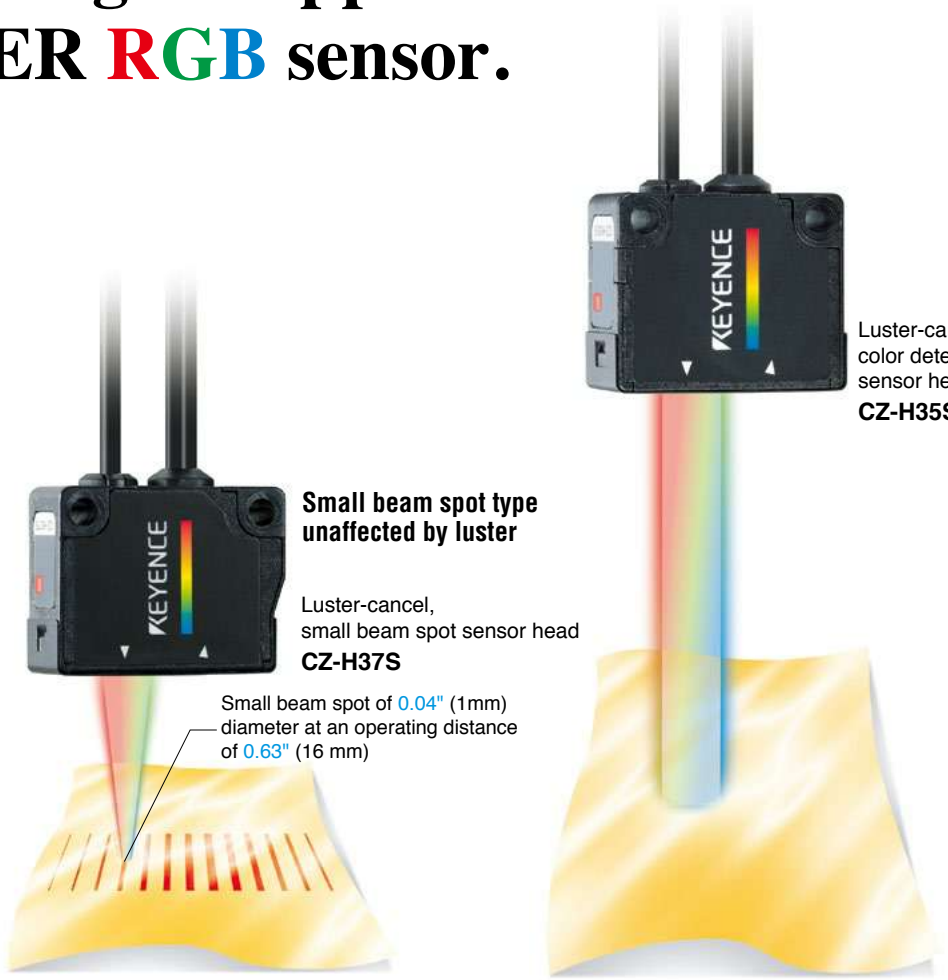

Shape, position, inclination, and surface luster

Less affected by changes in target condition

Extremely high power

Utilizes the world's first hybrid structure

The SUPER RGB sensor was developed by a dramatic redesign of the sensor head structure to improve overall performance.
The transmitter uses an optical fiber, which creates an incredibly uniform beam spot and helps reduce the size of the sensor head.
The light-receiving circuit is built into the sensor head, enhancing its detection ability and improving stability.

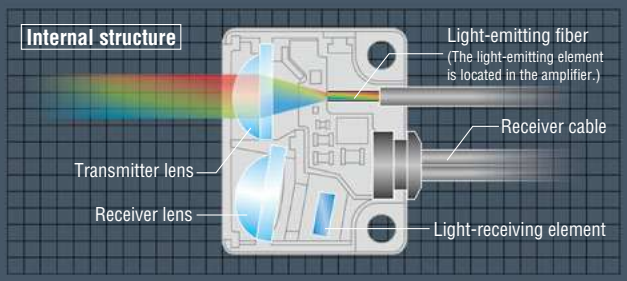

Adjustable spot, color detection sensor head
CZ-H32

Fluorescence detection UV sensor not affected by patterns or colors

Fluorescence detection UV sensor head
CZ-H52

Emits UV light to detect fluorescent materials and marks.

Beam spot adjustable in 3 sizes

Versatile detection from a long distance

UV light application

Detecting fluorescent materials and marks

RGB light source for triple 16-bit calculation

Three-color light source for accurate target recognition

The SUPER RGB sensor incorporates three separate color LED's. The signal from each color is converted into 16-bit data in the receiver to enable color recognition. This ensures accurate detection regardless of target vibration.

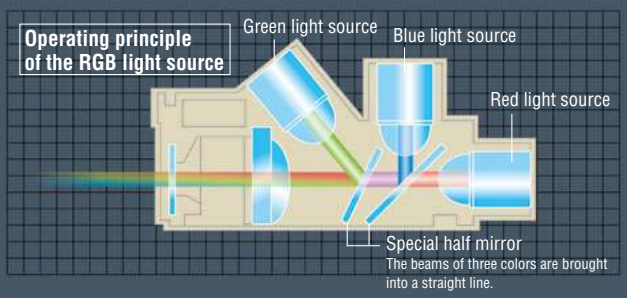

Simple sensitivity adjustment

One-touch calibration

The SUPER RGB sensor can be calibrated with the push of a button. This simple approach eliminates variation between operators and ensures continuous, stable detection.

Dual Digital display, amplifier
CZ-V21A(P)/V22A(P)

Choose the sensor head that is right for your application

CZ-H35S Luster-cancel, reflective type

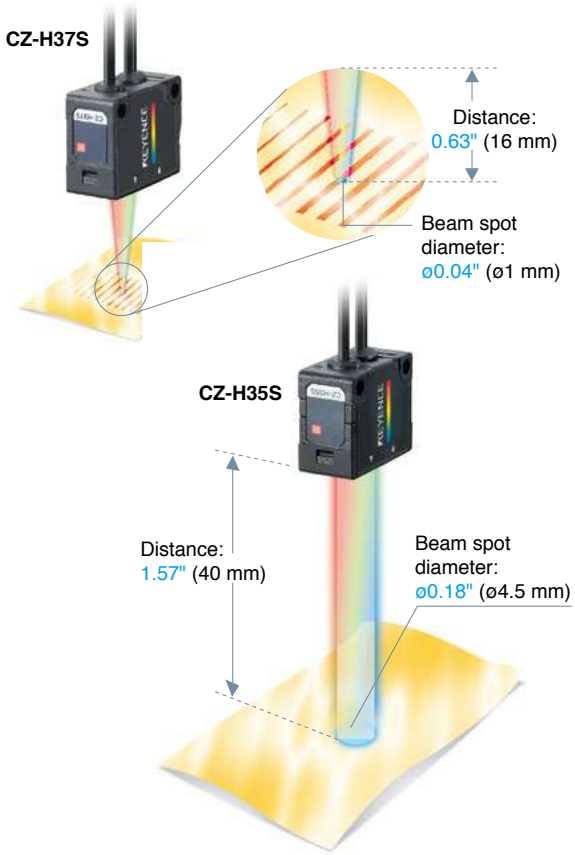

CZ-H37S Small beam spot type

The beam spot is as small as 0.04" (1 mm) in diameter at an operating distance of 0.63" (16 mm). This ensures reliable detection of objects and components smaller than those detectable with conventional models.

Distance vs. beam spot diameter (Typical) Units: inch mm

Distance	0.47" 12	0.55" 14	0.63" 16	0.71" 18	0.79" 20
Beam spot diameter	0.11" 2.9	0.07" 1.9	0.04" 1	0.05" 1.3	0.08" 2

Less affected by shape, position, inclination, and surface luster

The CZ-H35S/CZ-H37S incorporates a polarizing filter which cancels the reflection from the glossy section and only recognizes targets by their color components.
The CZ-H35S/CZ-H37S maintains accurate detection despite changing target conditions.

What is "luster"?

As the picture on the right shows, depending on the illumination some sections on a pepper's surface can appear white. Like human eyes, conventional sensors can not recognize the correct colors of such a target.

CZ-H32 Adjustable spot, reflective type

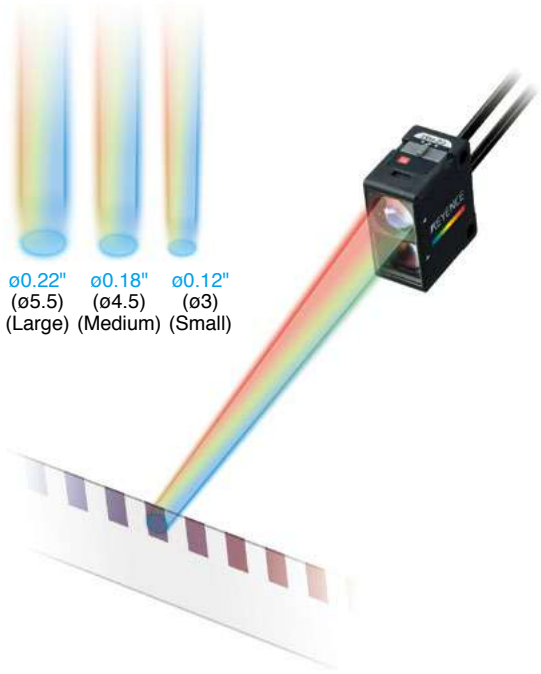

Adjustable beam spot

Three beam spot sizes can be easily selected by adjusting the slide switch, allowing a wide range of targets to be inspected.

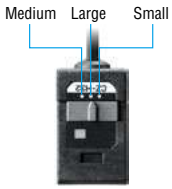

Long detecting range of 1.97" to 3.74" (50 to 95 mm)

Detection is available within a range of 1.97" to 3.74" (50 to 95 mm). The sensor can be mounted at a long distance and is less affected by changes in target position.

Distance vs. beam spot diameter (Typical)

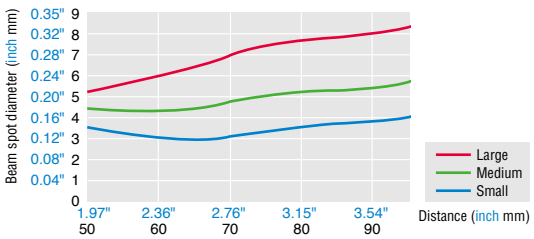

A wide variety of detection applications from every industry

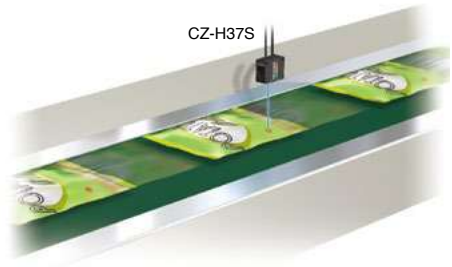

Detecting marks on bags printed with multiple colors

The luster-cancel type stably detects marks on bags even when the background of the mark vibrates or has luster. The small beam spot ensures reliable detection of even small marks.

Differentiation between the front and back sides of chips after being sealed in embossed tape

The luster-cancel type, which cancels the influence of specular reflection, stably differentiates between the front and back sides of chips even through a transparent film.

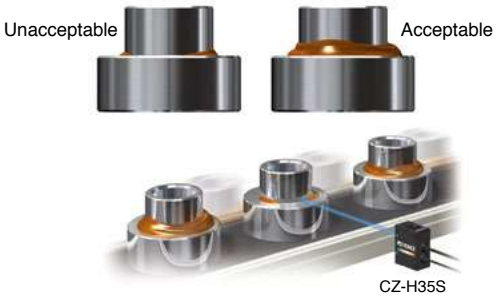

Detecting the presence/absence of grease

By canceling the influence of surface luster and target position, the CZ-V20 reliably detects grease, despite its non-uniform shape and position.

Detecting the seam on a spray can

Even when patterns are printed on spray cans, the sensor detects only the seam.

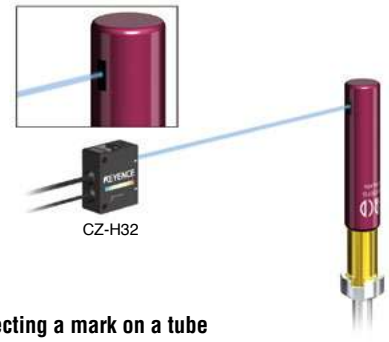

Detecting a mark on a tube

Selecting the small beam spot allows stable detection of small marks even from a long distance.

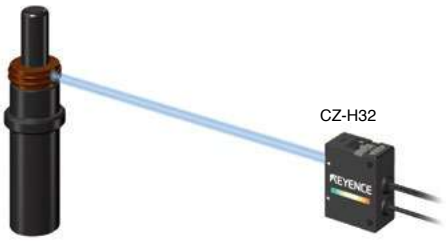

Checking parts assembly

The enhanced detection ability ensures stable detection of dark-colored targets.

Detecting improperly positioned labels

Detection is stable because the color recognition is not affected by the change in bottle colors. The interference prevention function assures successful detection when two sensor heads are mounted in close proximity.

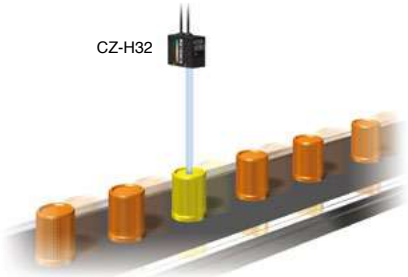

Detecting caps of different colors

The CZ-V20 Series stably detects subtle color differences that are difficult to detect with conventional sensors. Since detection is based on RGB components, it is less affected by target position or vibration.

High resolution amplifier for triple 16-bit calculation

RGB light source for diversified target recognition

The SUPER RGB sensor enables stable detection by using a three-color light source.

Advantage of the RGB light source 1 Accurate target recognition

Single-color light source

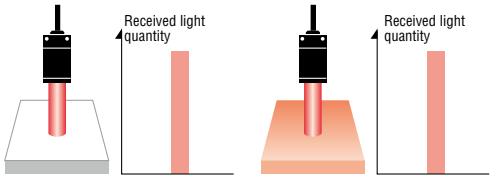

Almost no difference is recognized between certain colors, resulting in unstable detection.

Three-color light source

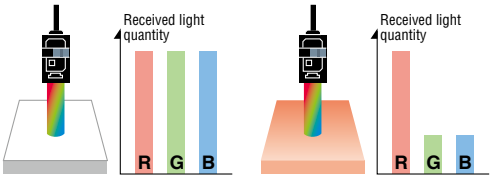

The received light quantity is converted into a ratio of three colors, and the target is recognized by its color. This ensures accurate detection.

Advantage of the RGB light source 2 Less affected by changes in target position

Single-color light source

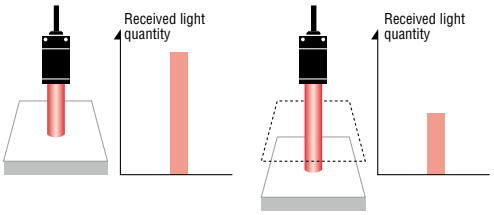

When the target position changes, the received light quantity changes according to the distance between the target and the sensor head, resulting in unstable detection.

Three-color light source

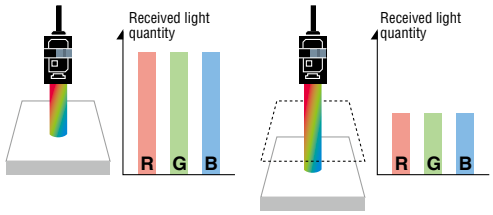

Even when the target position changes and the received light quantity changes, the ratio of the three colors does not change. Stable detection is ensured.

Dual digital display & Direct access

Both the current value and set value are displayed simultaneously.
Sensitivity and fine adjustment can also be done manually.

CZ-V21A(P)/V22A(P) Digital display amplifier

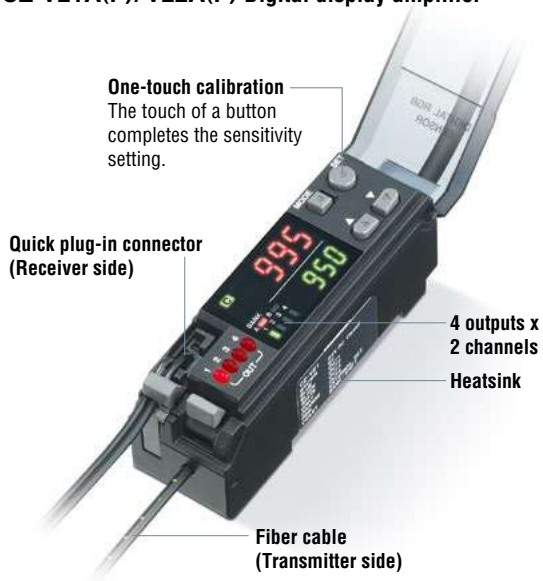

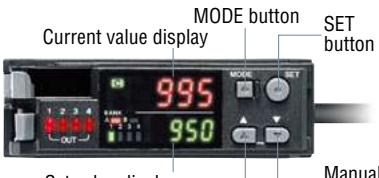

1-line connection supported. Interference prevention for up to 2 amplifiers

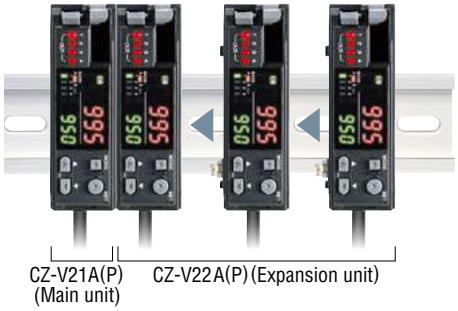

Power is supplied through the connector on the side, saving connection cables.

Detections that were once difficult can easily and reliably be achieved. (Super I Mode)

Automatic selection of 7 different light combinations

In the Super I mode, the sensor detects the received light quantity and automatically selects the most stable light from seven patterns. (There is no need for complicated settings because the light source is automatically selected during the sensitivity setting.)*

* In reality, the color of the emitted light does not change because the light combination is selected by the receiver.

SUPER mode + 3 LEDs for exceptionally powerful detection

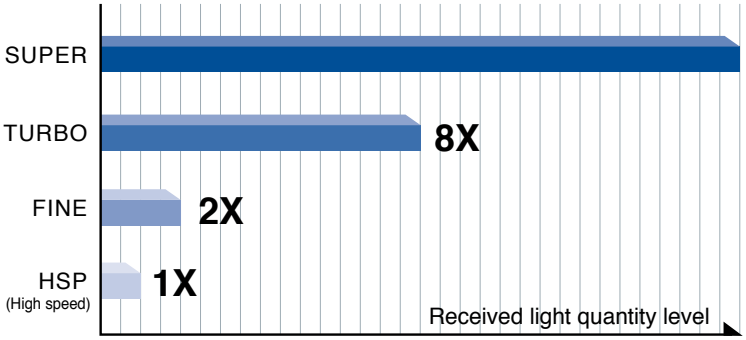

3 LEDs
Red, green, blue

The combination of the SUPER mode + 3 high-intensity LEDs has achieved unrivaled detection power. Even dark-colored targets can be reliably inspected.

Three detection modes for every target

Super I	C	C+I
Detects the received light quantity	Detects the color components	Detects the color components and received light quantity

Advanced features that provide 100% reliability

Four independent outputs

C | C+I | Super I

This function is useful for target differentiation. The sensor stores data of four types of targets simultaneously and allows the setting and output for each target independently. When the C or C+I mode is used, the bank function enables differentiation of up to eight different types of targets.

Shift function

Super I

This function is useful for detecting subtle color difference. When there is a change in the surrounding environment over time, the displayed value can be compensated with the external shift input.

When the difference in sensitivity between the target and the background is small, providing shift inputs periodically will compensate for data variations.

External calibration function

C | C+I | Super I

The sensitivity can be adjusted by using an external device such as a PLC.

Automatic calibration adjustment

C | C+I

After the sensitivity setting is complete, the set value can be finely adjusted by detecting actual acceptable or unacceptable targets and adding (increasing) or excluding (decreasing) the set value.

Attenuation function

C | C+I | Super I

When the reflection from a target is too strong, the attenuation function can be used to decrease the sensitivity.

Three types of timer functions

C | C+I | Super I

Three types of timers are available: ON-delay, OFF-delay, and One-shot. The timer value can be set between 1 ms and 1,000 ms.

Specifications

Sensor head

Type		Adjustable spot	Luster cancel	Luster-cancel, small beam spot	Fluorescence detection UV
Model		CZ-H32	CZ-H35S	CZ-H37S	CZ-H52
Detection range		1.97" to 3.74" 50 to 95 mm (Recommended: 2.76" 70 mm)	1.10" to 2.05" (28 to 52 mm) (Recommended: 1.57" 40 mm)	0.43" to 0.79" (11 to 20 mm) (Recommended: 0.59" 15 mm)	0.98" to 2.17" (25 to 55 mm) (Recommended: 1.38" 35 mm)
Smallest spot diameter		Small: 0.12" 3 mm dia. Medium: 0.18" 4.5 mm dia. Large: 0.22" 5.5 mm dia. at respective reference distance [1]	0.18" 4.5 mm dia. at reference distance of 1.57" 40 mm	0.04" 1 mm dia. at reference distance of 0.63" 16 mm	Approx. 0.39" 10 mm dia. at reference distance of 0.98" 25 mm
Light source		Red LED (665 nm)/Green LED (520 nm)/Blue LED (465 nm)			UV (ultraviolet) LED (375 nm) [2]
Receivable wavelength (Receiver)		—			425 to 550 nm
Minimum bend radius of fiber		0.98" 25 mm		0.59" 15 mm	—
Ambient light		Incandescent lamp: 10,000 lux max., Sunlight: 20,000 lux max.			
Ambient temperature		-10 to +55°C (14 to 131°F), No condensation			
Vibration		10 to 55 Hz, 0.06" (1.5 mm) double amplitude in X, Y, and Z directions, 2 hours respectively			
Enclosure rating		IP-40			
Material	Housing	Fiberglass reinforced plastic			
	Lens cover	Polyarylate	Triacetate, Polyarylate (Metal section: TYPE 304 stainless steel)		Glass
Weight		Approx. 40 g (with 6.6' 2-m cable)		Approx. 45 g (with 6.6' 2-m cable)	Approx. 40 g (with 6.6' 2-m cable)

1. Reference distance: 2.56" 65 mm for Small, 2.36" 60 mm for Medium, and 1.97" 50 mm for Large
2. The CZ-H52 emits ultraviolet light from the transmitter. Do not directly look at the light source while in operation.

Amplifier

Model	NPN	CZ-V21A	CZ-V22A
	PNP	CZ-V21AP	CZ-V22AP
Unit type (Main/expansion)		Main unit	Expansion unit
Response time		200 μs (HIGH SPEED)/1 ms (FINE)/4 ms (TURBO)/8 ms (SUPER)	
Control output [1]		NPN (PNP) open-collector x 4 channels, 40 VDC (30 VDC) max., Up to 100 mA for one output, Up to 200 mA in total of 4 outputs, Residual voltage: 1.0 V max.	
Protection circuit		Reverse-polarity protection, overcurrent protection, surge absorber	
External calibration input		Input time: 20 ms min.	
External bank switch input (C/C+I mode), External shift input (Super I mode)		Input time: 20 ms min.	
Timer function		Timer OFF/OFF-delay/ON-delay/One-shot, Timer time: 1 to 1,000 ms adjustable (for each bank respectively)	
Power supply		24 VDC, Ripple (P-P): 10% max.	
Current consumption		Normal mode: 1.5 W (62.5 mA max.), Eco-mode: 1 W (42.0 mA max.)	
Ambient temperature [2]		-10 to +55°C (14 to 131°F), No condensation	
Vibration		10 to 55 Hz, 0.06" 1.5 mm double-amplitude in X, Y, and Z directions, 2 hours respectively	
Material		Housing, cover: Polycarbonate	
Weight (with 2-m cable)		Approx. 110 g	Approx. 100 g

1. 20 mA max. when several units are connected.
2. When several units are connected, the acceptable ambient temperature varies depending on the conditions given below. To connect several units, be sure to mount them to a DIN rail and to limit the output current to a maximum of 20 mA.
   When 1 or 2 units are connected: -10 to +50ºC (14 to 122ºF)
   When 3 units are connected: -10 to +45ºC (14 to 113ºF)

Note: The expansion unit of the FS-V20 Series cannot be connected to the main unit of the CZ-V20 Series. To connect the FS and CZ Series units, connect the expansion unit of the CZ-V20 Series to the main unit of the FS-V20 Series. To connect two or more expansion units, connect the CZ-V20 Series units on the right of the FS-V20 Series units.

Fluorescence detection UV sensor suitable for the detection of fluorescent materials and paints

CZ-H52

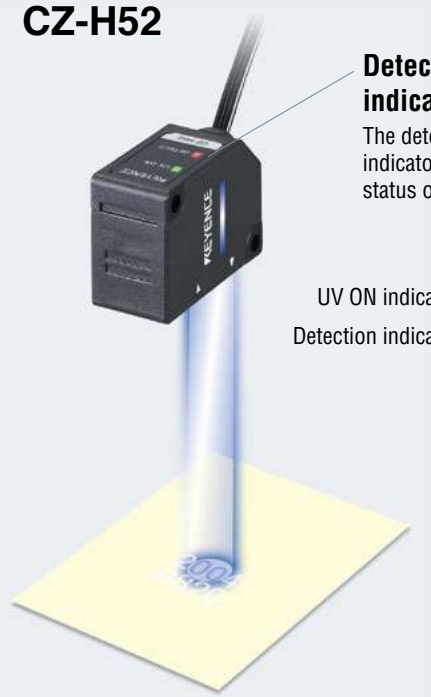

Detection/operation indicators

The detection and operation indicators show the current status of the detection.

UV ON indicator

Detection indicator

Detecting fluorescent marks without being affected by patterns or colors

The CZ-H52 emits UV light from the transmitter and detects the reflected light which was converted into visible light by the fluorescent material. Fluorescent materials and paints are normally invisible, however, they reflect visible light when UV light is applied.

Targets which may contain fluorescent materials/paints

- Fluorescent label
- Fluorescent chalk
- Fluorescent lubricant
- Fluorescent dye
- Paper
- Adhesive
- Marking tool/ink-jet printer
- Fluorescent color
- Label
- Sticker
- Optically bright materials
- Transparent film
- Marking ink
- Grease
- Ink and varnish/lacquer
- Felt-tip pen
- Printing ink And so on

The CZ-H52 may be effective for detecting the above targets.

Super-small head for space saving

The small sensor head measures only 0.59" (W) x 1.30" (H) x 0.94" (D) (15 x 33 x 24 mm). It can be easily mounted in tight spaces.

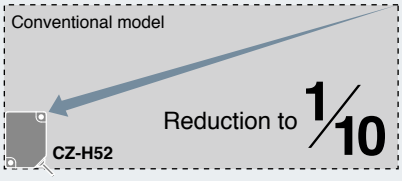

Applications

Many targets contain fluorescent materials or paints. The fluorescence detection UV sensor may be able to detect targets which cannot be detected with photoelectric sensors. Try your target in an actual situation.

Detecting labels on white containers

The fluorescent component contained in a label is detected to check for the presence/absence of the label. Since the detection uses the fluorescent components, it can stably detect even white labels on white containers.

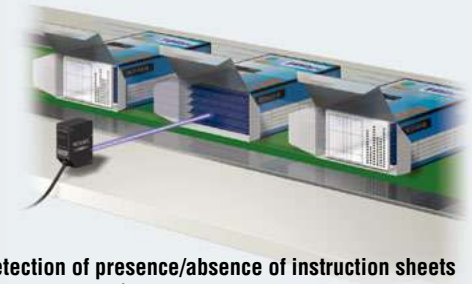

Detection of presence/absence of instruction sheets (package insert)

The CZ-H52 detects the fluorescent component contained in paper to check whether the instruction sheet (package insert) is properly inserted into each medicine package.

Detection of presence/absence of invisible print

The CZ-H52 detects the presence or absence of the print in invisible ink which contains a fluorescent component. The fluorescence detection UV sensor can stably detect print which cannot be detected with reflective type photoelectric sensors.

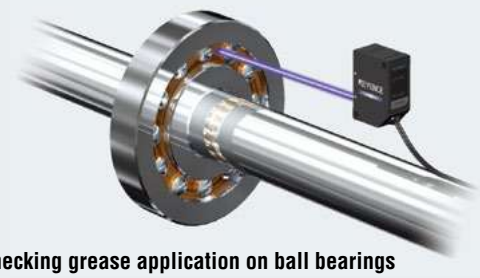

Checking grease application on ball bearings

The grease application is checked by detecting the presence/absence of the fluorescent component contained in it. Even glossy metal targets can be stably detected by ignoring the influence of specular reflection.

Dimensions

Unit: inch mm

CZ-H37S

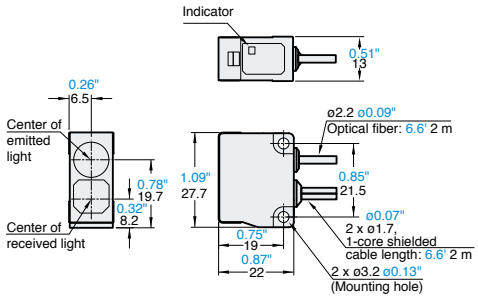

When a mounting bracket is attached

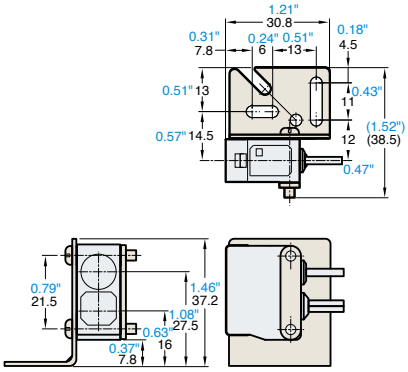

CZ-H52

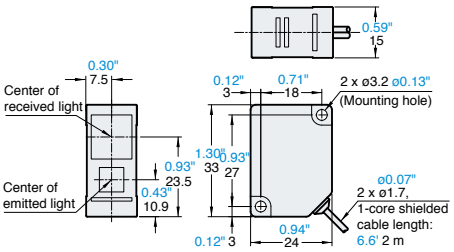

When a mounting bracket is attached

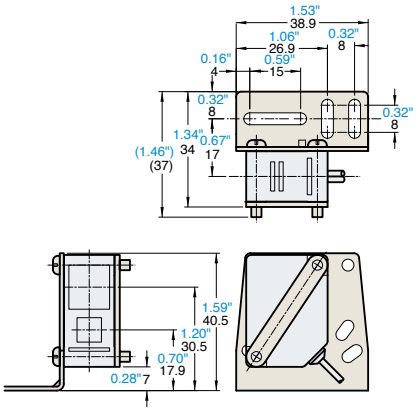

Mounting bracket (Supplied with the CZ-H52)

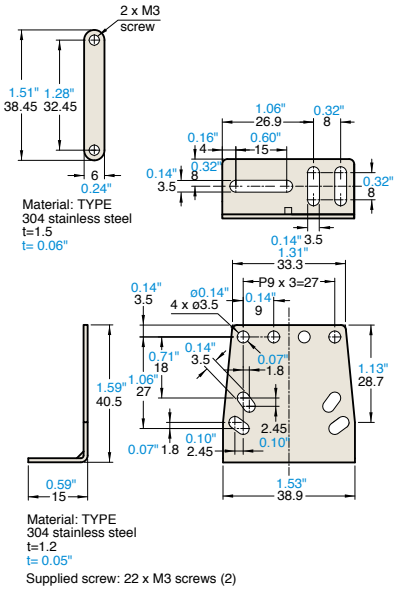

CZ-H32

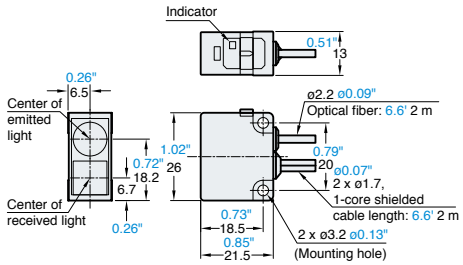

When a mounting bracket is attached

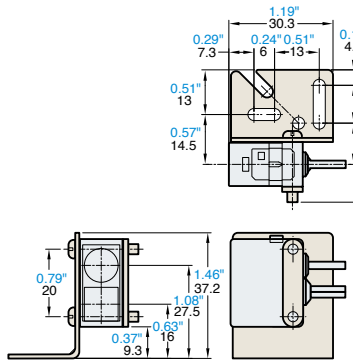

CZ-H35S

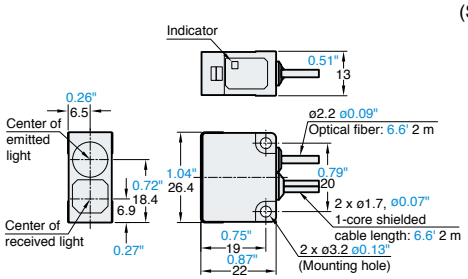

When a mounting bracket is attached

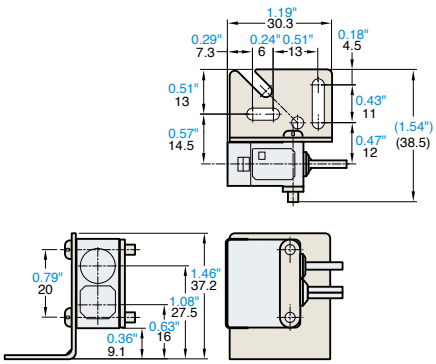

Mounting bracket (Supplied with the CZ-H32, H35S, and H37S)

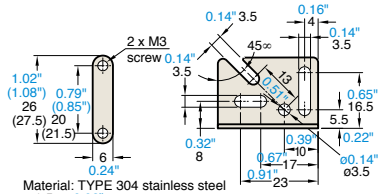

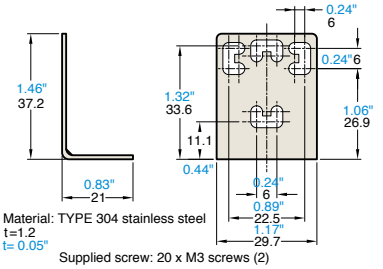

Unit: inch mm

CZ-V21A/CZ-V21AP

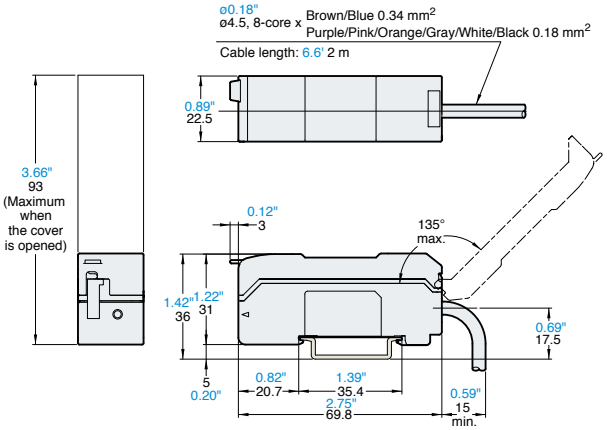

CZ-V22A/CZ-V22AP

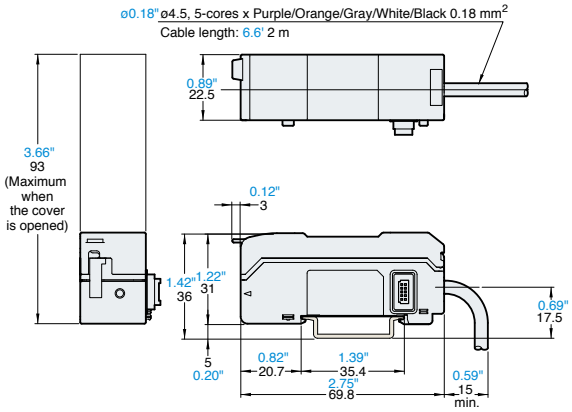

When a mounting bracket is attached (supplied with the CZ-V21A/V21AP)

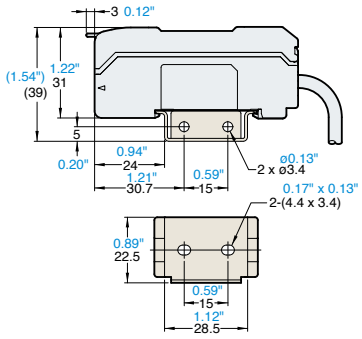

End unit (supplied with the CZ-V22A/V22AP)

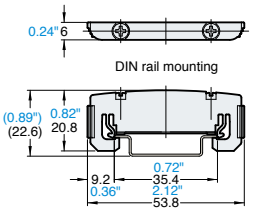

When several units are connected

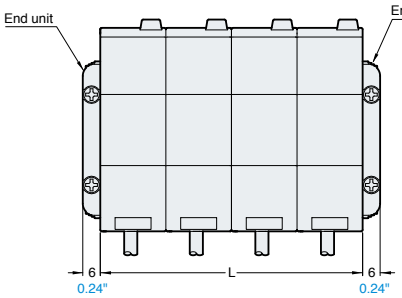

No. of expansion units	L
1	1.77" 45
2	2.66" 67.5
3	3.54" 90

Note: When connecting expansion units, be sure to use the end units.

Input/output circuit diagram

Connection

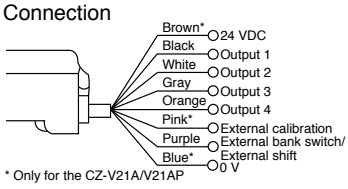

* Only for the CZ-V21A/V21AP

Output circuit

NPN

CZ-V21A/22A * Only for the CZ-V21A

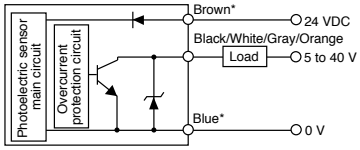

PNP

CZ-V21AP/22AP * Only for the CZ-V21AP

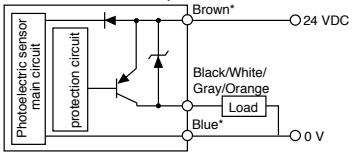

Input circuit

•External calibration (Pink)
•External bank switch/External shift (Purple)

NPN

CZ-V21A/V22A * Only for the CZ-V21A

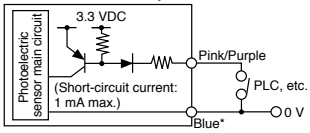

PNP

CZ-V21AP/V22AP * Only for the CZ-V21AP

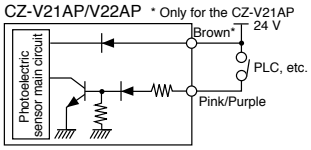

SUPER
RGB
SENSOR

KEYENCE

CALL TOLL FREE | TO CONTACT YOUR LOCAL OFFICE **1-888-KEYENCE** 1-888-539-3623

www.keyence.com

SAFETY INFORMATION
Please read the instruction manual carefully in order to safely operate any KEYENCE product.

CONTACT YOUR NEAREST OFFICE FOR RELEASE STATUS

KEYENCE CORPORATION OF AMERICA

Head Office 500 Park Boulevard, Suite 200, Itasca, IL 60143, U.S.A. **PHONE:** +1-201-930-0100 **FAX:** +1-855-539-0123 **E-mail:** keyence@keyence.com

AL Birmingham
AR Little Rock
AZ Phoenix
CA San Francisco
CA San Jose
CA Cupertino
CA Los Angeles
CA Irvine
CO Denver
FL Tampa
GA Atlanta
IA Iowa
IL Chicago
IN Indianapolis
KY Louisville
MA Boston
MI Detroit
MI Grand Rapids
MN Minneapolis
MO Kansas City
MO St. Louis
NJ Elmwood Park
NY Rochester
NC Charlotte
NC Raleigh
OH Cincinnati
OH Cleveland
OR Portland
PA Philadelphia
PA Pittsburgh
SC Greenville
TN Knoxville
TN Nashville
TX Austin
TX Dallas
UT Salt Lake City
WA Seattle
WI Milwaukee

KEYENCE CANADA INC.

Head Office **PHONE:** +1-905-366-7655 **FAX:** +1-905-366-1122 **E-mail:** keyencecanada@keyence.com
Montreal **PHONE:** +1-514-694-4740 **FAX:** +1-514-694-3206 **Windsor** **PHONE:** +1-905-366-7655 **FAX:** +1-905-366-1122

KEYENCE MEXICO S.A. DE C.V.

PHONE: +52-55-8850-0100 **FAX:** +52-81-8220-9097
E-mail: keyencemexico@keyence.com

KA1-1099

CZV20-KA-C-US 2030-10 611004