Model 125

Window Diameter 6.31"

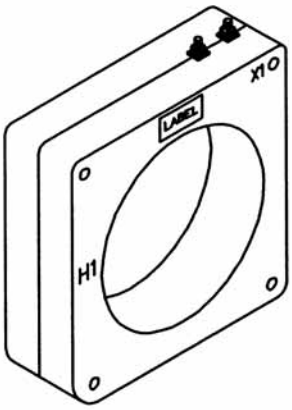

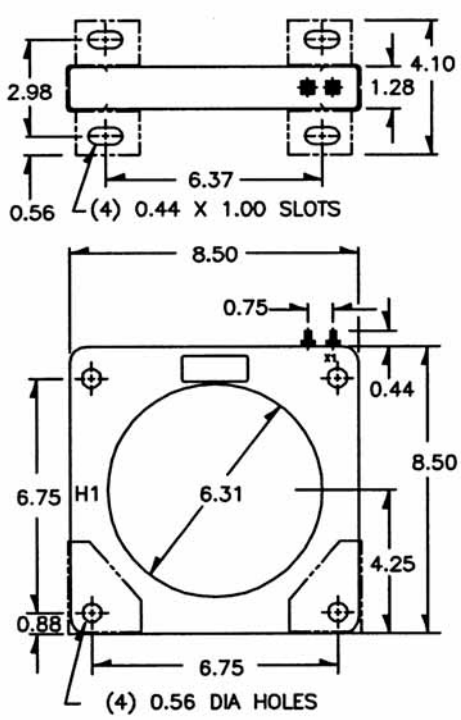

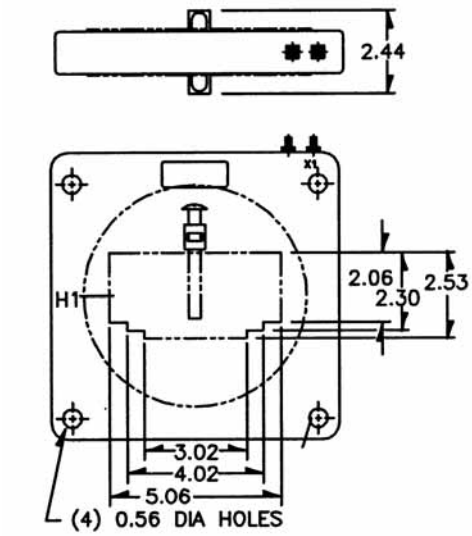

(BUS BAR MOUNTING KIT SHOWN)

Catalogue Number	Current Ratio	ANSI metering class at 60Hz					Secondary winding resistance (OHMS @ 75˚C	Continuous thermal rating factor	
		B0.1	B0.2	B0.5	B0.9	B1.8		@30˚C	@55˚C
125 – 601	600:5	0.3	0.3	1.2	1.2	2.4	0.071	1.5	1.33
125 – 751	750:5	0.3	0.3	0.6	1.2	2.4	0.143	1.5	1.33
125 – 801	800:5	0.3	0.3	0.6	1.2	2.4	0.116	1.5	1.33
125 – 102	1000:5	0.3	0.3	0.3	0.6	1.2	0.187	1.5	1.33
125 – 122	1200:5	0.3	0.3	0.3	0.6	1.2	0.224	1.5	1.55
125 – 152	1500:5	0.3	0.3	0.3	0.3	0.6	0.285	1.5	1.33
125 – 162	1600:5	0.3	0.3	0.3	0.3	0.6	0.304	1.5	1.33
125 – 202	2000:5	0.3	0.3	0.3	0.3	0.6	0.280	1.5	1.0
125 – 252	2500:5	0.3	0.3	0.3	0.3	0.6	0.351	1.33	1.0
125 – 302	3000:5	0.3	0.3	0.3	0.3	0.6	0.421	1.33	1.0
125 – 352	3500:5	0.3	0.3	0.3	0.3	0.3	0.491	1.33	1.0
125 – 402	4000:5	0.3	0.3	0.3	0.3	0.3	0.696	1.0	0.8

Application:
Marketing

Frequency:
50 – 400Hz

Insulation Level:
600 Volts, 10kV BIL full wave
- Terminals are brass studs No. 8 – 32 with one flatwasher, lockwasher and regular nut
- Order mounting bracket kit separately
- Order busbar mounting kit 1021D00135, separately, factory installed
- Approximate weight: 3 lbs

Approvals

UL 257877
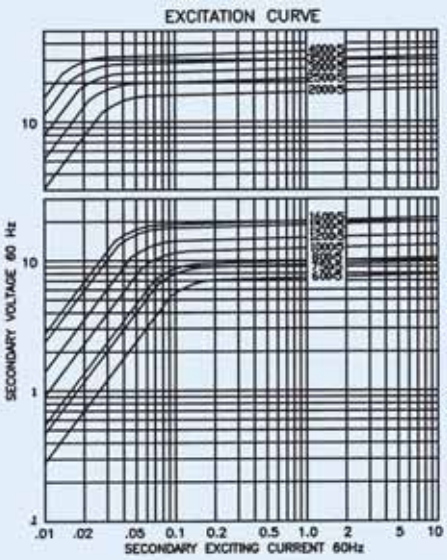
CSA 223647